inspire awards-manak

CATO FRIDGE

fppt.com

PROBLEM

Whenever a person is having his/her hands full of things which are needed to be kept in the fridge, the person asks help of someone to open the fridge door or the person keeps all things aside and opens the fridge door

fppt.com

SOLUTION

This problem induced me to make a **Cato Fridge.** It works in a way such that the fridge senses the user when he/she comes near and which will open the door automatically

fppt.com

MATERIALS REQUIRED

- Arduino UNO
- Micro Servo Motor
- Switch
- Wires
- Ultrasonic Sensor
- 9V Battery
- Mini Bread Board

fppt.com

EXPLAINATION

In my project I have used ultrasonic sensor to sense the user while coming closer (25cm or below) to the fridge. If the ultrasonic sensor starts sensing the user, it gives information to Arduino UNO and Arduino UNO gives information to servo motor to open the fridge door. The fridge door will be kept open until the user completes his/her work in the fridge. When the ultrasonic sensor senses the user moving away from the fridge, the servo motor closes the fridge door.

fppt.com

PRINCIPLE

I used a microcontroller called Arduino to control the whole function. To code Arduino I used the software called **Arduino IDE.** In Arduino IDE I applied C program. I used 9V battery to power it.

fppt.com

CIRCUIT DIAGRAM

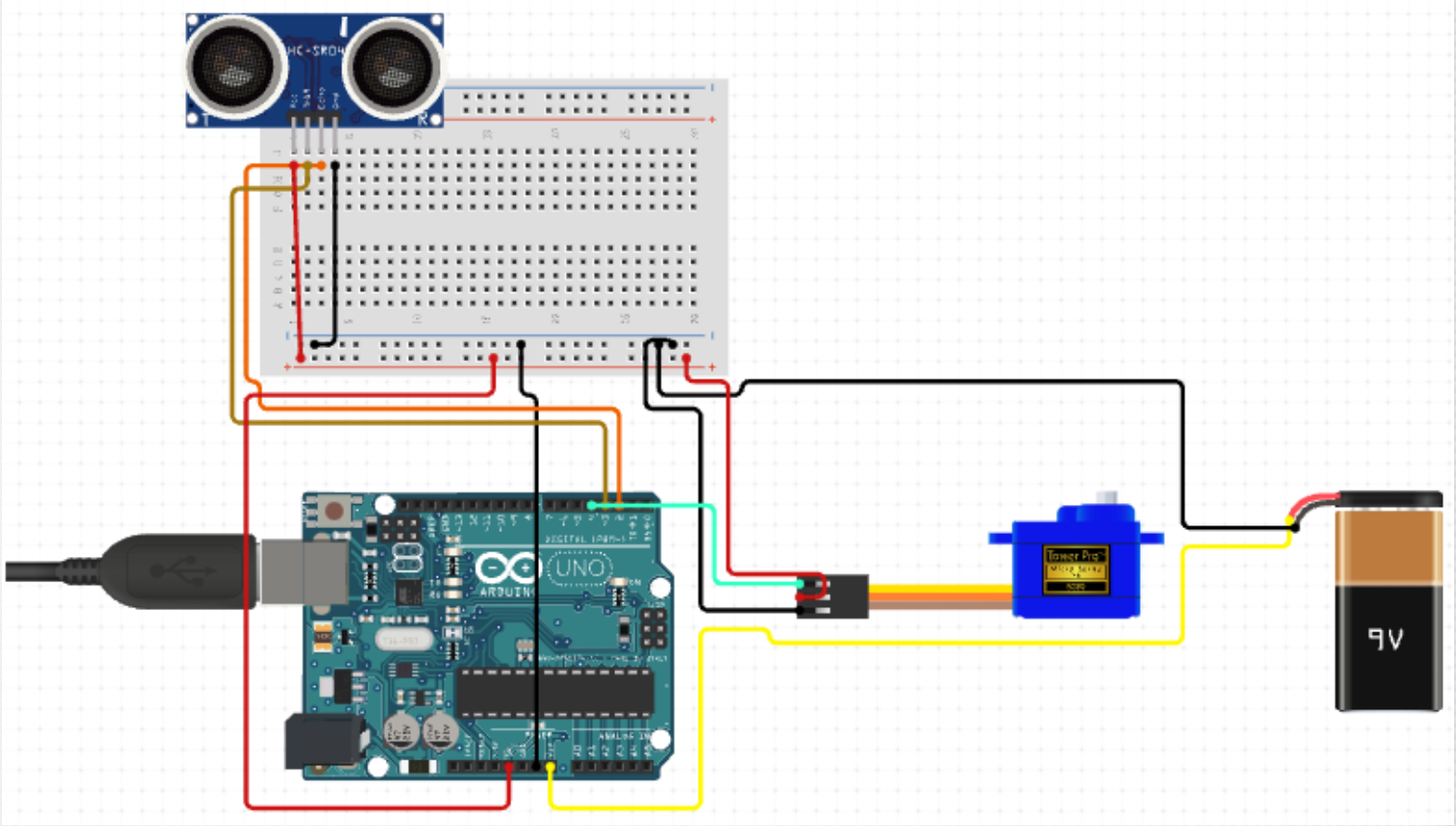

fppt.com

FUTURE PLAN

- In future I want to make it available to all the fridge users which relieves the irritation and burden while using the fridge.
- I will develop this project and start a company and sell it through my company at economical cost.

fppt.com

CONCLUSION

- Mainly I did this project in the aim of reducing the problem faced by people while loading things into the fridge.

fppt.com

THANK YOU

LET'S RELIEVE THE BURDEN

fppt.com